Zirkona DIN

N.B.!

Always apply thread lockers on 20 mm threads. Use Loctite or equivalent.

Zirkona DIN

Installation is done via a DIN compartment in the instrument panel.

Remove two DINmounts from the instrument panel.

Put the new DIN mount in place in one of the compartments. The other, empty compartment is used in order to reach in and screw in place the new DIN mount.

Inside the panel, there is a metal plate with pre-perforated holes. Install the M10 screw from the rear side of the plate into the new DIN mount.

Replace the other DIN mount in the empty compartment.

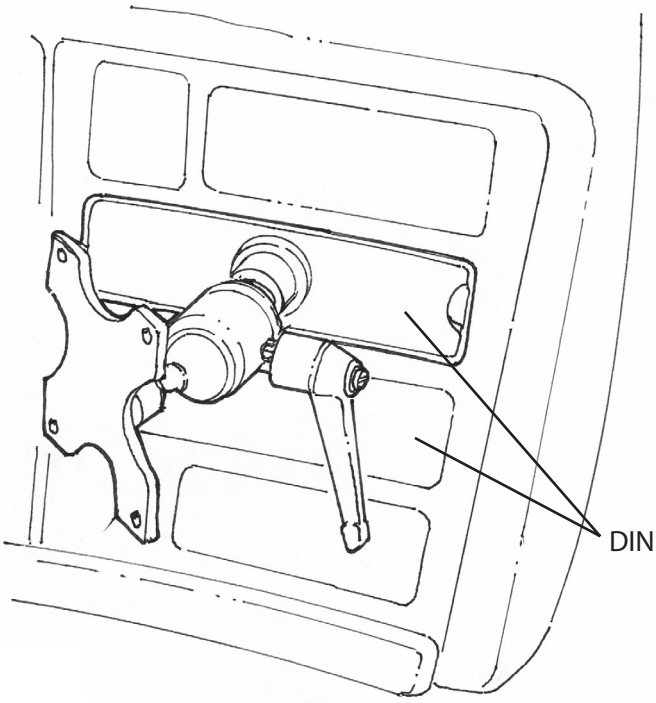

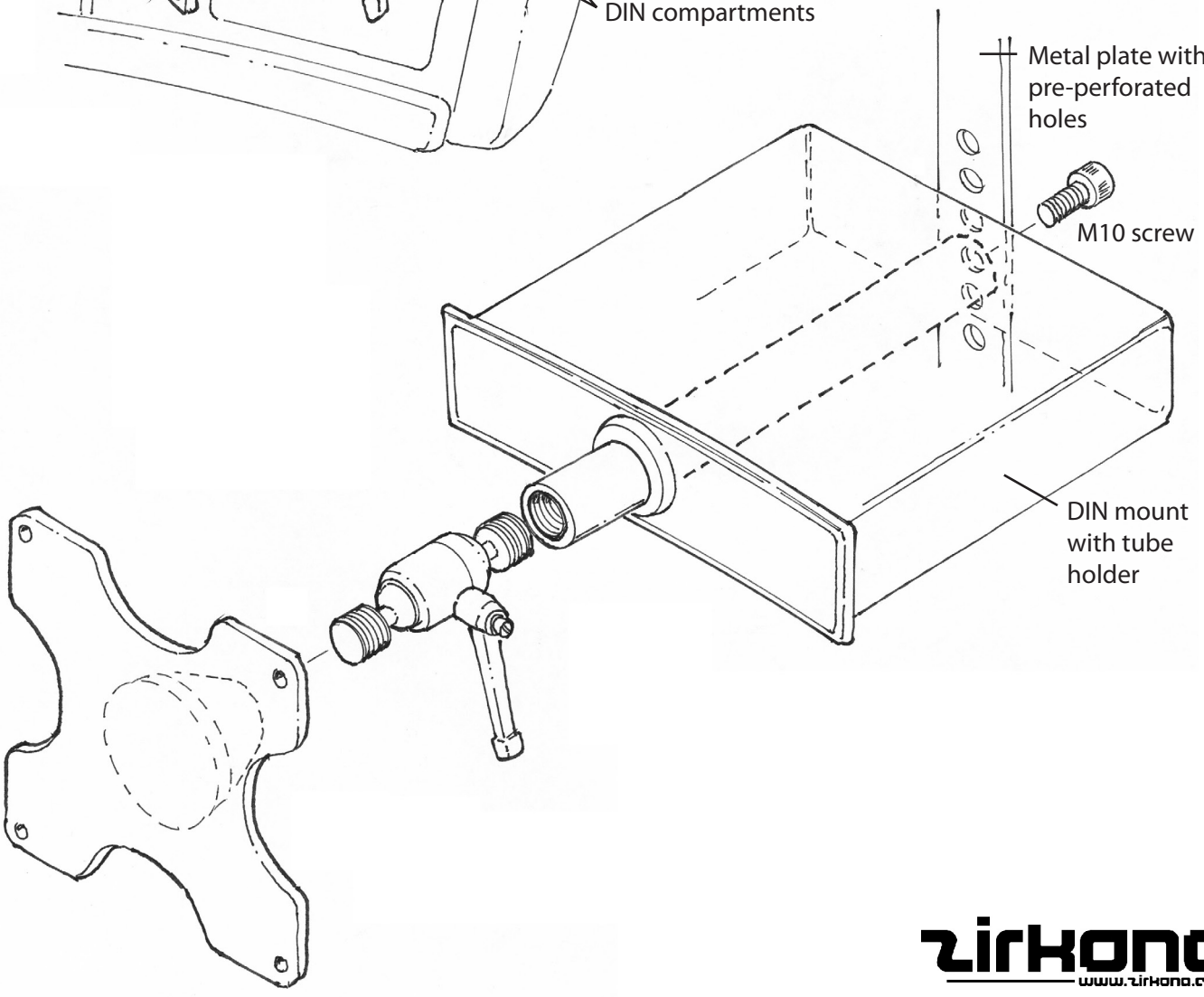

Zirkona Sweden AB assumes no responsibility for the installation or use of the product. All responsibility rests with the user.